LONG SEAMS

| COURSE | ORIENTATION |
|---|---|
| 1 (TOP) | 270° |
| 2 | 278° |

*VERT – TOP TO BOTTOM

Ship loose items:
NONE

NOTE 7: ALL INTERNAL WELDS GROUND SMOOTH NOT FLUSH. ALL INTERNAL SURFACE TO BE 150 GRIT.
NOTE 8: FULL RADIOGRAPHY IS REQUIRED PER CODE.

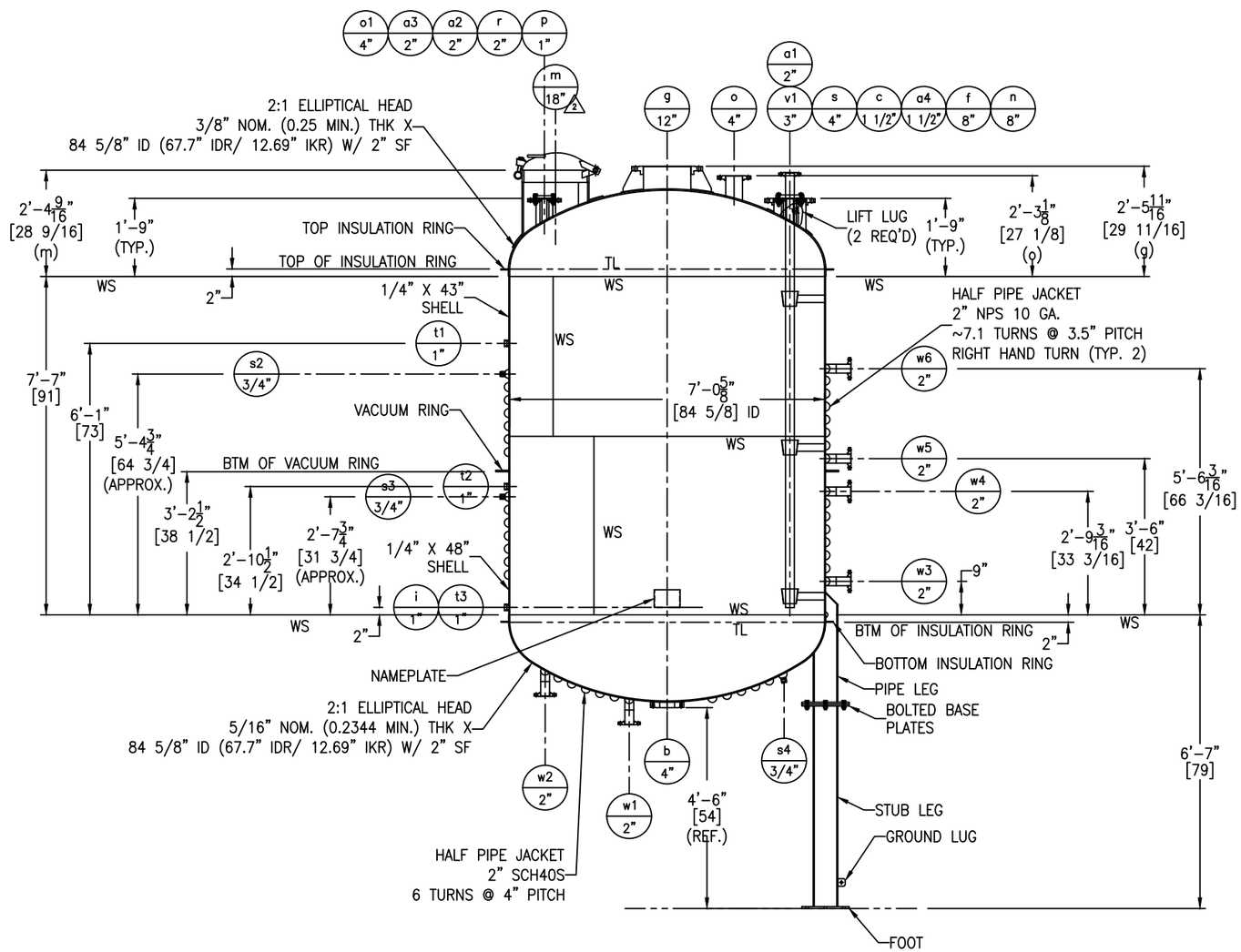


FC-14 GT-11

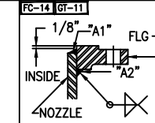


FIGURE NO. 1

FC-14 GT-11

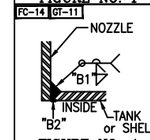


FIGURE NO. 4

FC-14 GT-11

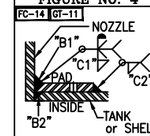


FIGURE NO. 5

FC-14 SA-30

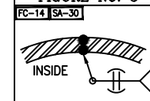


SHELL THK. < 5/16"

FIGURE NO. 9

FC-14 SA-30

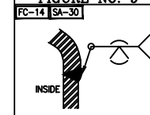


FOR HEADS
FIGURE NO. 11

FC-14 GT-11

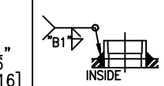


HALF CPLG TO SHELL
FIGURE NO. 12

FC-14 GT-11

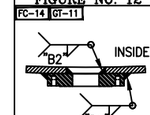


STUDPAD TO HEAD
FIGURE NO. 13

## NOZZLE SCHEDULE

| MARK | SERVICE | SIZE | RATING | TYPE / STYLE | NECK SCHED. | PROJECTION EXT. (E) | PROJECTION INT. (MIN.) | WELD FIGURE | REPAD SIZE (WIDTH X THK.) | WELD SIZE "A1" | "A2" | "B1" | "B2" | "C1" | "C2" |
|---|---|---|---|---|---|---|---|---|---|---|---|---|---|---|---|
| a1 | INLET | 2" | 150# | RFSO | 40S | SEE DWG | SEE DWG | 1,7 | – | 3/16 | 1/4 | 3/16 | 1/8 | – | – |
| v1 | NOZZLE FOR a1 | 3" | 150# | RFSO w/ BLIND | 40S | SEE DWG | – | 1,4 | – | 1/4 | 5/16 | 3/16 | 1/8 | – | – |
| a2 | QUENCH | 2" | 150# | RFSO | 40S | SEE DWG | – | 1,4 | – | 3/16 | 1/4 | 3/16 | 1/8 | – | – |
| a3 | CONDENSATE RETURN | 2" | 150# | RFSO | 40S | SEE DWG | – | 1,4 | – | 3/16 | 1/4 | 3/16 | 1/8 | – | – |
| a4 | AIR SPARGER | 1 1/2" | 150# | RFSO | 40S | SEE DWG | – | 1,4 | – | 3/16 | 1/4 | 3/16 | 1/8 | – | – |
| b | OUTLET/DRAIN | 4" | 150# | STUDPAD | – | – | – | 13 | – | – | – | 1/4 | 5/16 | – | – |
| c | NITROGEN | 1 1/2" | 150# | RFSO | 40S | SEE DWG | – | 1,4 | – | 3/16 | 1/4 | 3/16 | 1/8 | – | – |
| f | VENT | 8" | 150# | RFSO | 40S | SEE DWG | – | 1,5 | 2" X 1/4" | 1/4 | 1/2 | 3/8 | 1/8 | 1/4 | 3/16 |
| g | AGITATOR | 12" | 150# | RFSO | 40S | SEE DWG | – | 1,5 | 4" X 1/4" | 1/4 | 9/16 | 5/16 | 1/8 | 1/4 | 3/16 |
| i | SAMPLE VALVE | 1" | 3000# | HALF THRD CPLG | – | – | – | 12 | – | – | – | 3/16 | 1/8 | – | – |
| m | MANWAY | 18" | – | QUICK OPENING T-BOLT | 3/8" | SEE DWG | – | 1,5 | 4" X 1/4" | 1/4 | 3/8 | 3/8 | 1/8 | 3/8 | 1/4 |
| n | VAPOUR OUTLET | 8" | 150# | RFSO | 40S | SEE DWG | – | 1,5 | 2" X 1/4" | 1/4 | 1/2 | 5/16 | 1/8 | 1/4 | 3/16 |
| o | SIGHT GLASS | 4" | 150# | RFSO | 80S | SEE DWG | – | 1,4 | – | 1/4 | 3/8 | 1/4 | 1/8 | – | – |
| o1 | LIGHT GLASS | 4" | 150# | RFSO | 80S | SEE DWG | – | 1,4 | – | 1/4 | 3/8 | 1/4 | 1/8 | – | – |
| p | PRESSURE | 1" | 150# | RFSO | 40S | SEE DWG | – | 1,4 | – | 3/16 | 3/16 | 3/16 | 1/8 | – | – |
| s1 | SAFETY RELIEF | 4" | 150# | RFSO | 80S | SEE DWG | – | 1,4 | – | 1/4 | 3/8 | 1/4 | 1/8 | – | – |
| s2 | SAFETY RELIEF JKT | 3/4" | 3000# | HALF THRD CPLG W/ PLUG | – | – | – | 12 | – | – | – | 3/16 | – | – | – |
| s3 | SAFETY RELIEF JKT | 3/4" | 3000# | HALF THRD CPLG W/ PLUG | – | – | – | 12 | – | – | – | 3/16 | – | – | – |
| s4 | SAFETY RELIEF JKT | 3/4" | 3000# | HALF THRD CPLG W/ PLUG | – | – | – | 12 | – | – | – | 3/16 | – | – | – |
| t1 | TEMPERATURE | 1" | 3000# | HALF THRD CPLG | – | – | – | 12 | – | – | – | 3/16 | – | – | – |
| t2 | TEMPERATURE | 1" | 3000# | HALF THRD CPLG | – | – | – | 12 | – | – | – | 3/16 | – | – | – |
| t3 | TEMPERATURE | 1" | 3000# | HALF THRD CPLG | – | – | – | 12 | – | – | – | 3/16 | – | – | – |
| R | SPARE | 2" | 150# | RFSO W/ BLIND | 40S | SEE DWG | – | 1,4 | – | 3/16 | 1/4 | 3/16 | 1/8 | – | – |
| w1 | JACKET INLET | 2" | 150# | RFSO | 40S | SEE DWG | – | 1 | – | 3/16 | 1/4 | SEE DETAIL | | – | – |
| w2 | JACKET OTLET | 2" | 150# | RFSO | 40S | SEE DWG | – | 1 | – | 3/16 | 1/4 | SEE DETAIL | | – | – |
| w3 | JACKET INLET | 2" | 150# | RFSO | 40S | SEE DWG | – | 1 | – | 3/16 | 1/4 | SEE DETAIL | | – | – |
| w4 | JACKET OTLET | 2" | 150# | RFSO | 40S | SEE DWG | – | 1 | – | 3/16 | 1/4 | SEE DETAIL | | – | – |
| w5 | JACKET INLET | 2" | 150# | RFSO | 40S | SEE DWG | – | 1 | – | 3/16 | 1/4 | SEE DETAIL | | – | – |
| w6 | JACKET OTLET | 2" | 150# | RFSO | 40S | SEE DWG | – | 1 | – | 3/16 | 1/4 | SEE DETAIL | | – | – |

## MATERIALS OF CONSTRUCTION

| | VESSEL |
|---|---|
| SHELL | SA240-316/316L #4 INSIDE POLISH |
| HEADS | SA240-316/316L #4 INSIDE POLISH |
| RIM ANGLE | – |
| NOZZLE NECKS | SA312-316/316L WLD |
| NOZZLE FLANGES | SA182F-316/316L |
| MANWAY NECKS | SA240-316/316L |
| MANWAY | SS316 |
| MANWAY GASKETS | VITON |
| NOZZLE GASKETS | GARLOCK 3000 |
| BOLTS/STUDS | SA193-B7 (ZINC PLATED) |
| NUTS | SA194-2H (ZINC PLATED) |
| REPADS | SA240-304/304L |
| COUPLINGS | SA182F-316/316L |
| SUPPORTS/HOLD DOWNS | SA240-304/304L & SA312-304/304L WLD |
| LIFTING LUGS | SA240-304/304L |
| VACUUM RINGS | SA240-304/304L |
| INSULATION RINGS | SA240-304/304L |
| GROUND LUG | SA240-304/304L |
| LADDER | – |
| TANK CLIPS (LADDER) | – |
| HANDRAIL | – |
| HANDRAIL CLIPS | – |
| PLATFORM | – |
| DIPTUBE | SA312-316/316L WLD (#4 POLISH) |
| DIPTUBE SUPPORT | SA240-316/316L & SA403/304/304L WPW (#4 POLISH) |
| JACKET SHELL | SA240-304/304L |
| JACKET HEADS | SA312-304/304L WLD |
| JACKET NOZZLE NECKS | SA312-304/304L WLD |
| JACKET NOZZLE FLANGES | SA182F-304/304L |

## DESIGN DATA

| | VESSEL |
|---|---|
| DESIGN AND FAB. CODE | ASME |
| CERT. STAMP REQ'D. | YES |
| DESIGN PRESSURE | 75 PSIG / FV |
| DESIGN TEMPERATURE | 400° F |
| MIN. DESIGN METAL TEMP. | -20° F @ 75 PSIG |
| OPERATING PRESSURE | – |
| OPERATING TEMPERATURE | 176° F |
| JOINT EFFICIENCY HEADS | 1.0 |
| JOINT EFFICIENCY SHELL | 1.0 |
| CORROSION ALLOWANCE | 0" |
| SPECIFIC GRAVITY | 1.04 |
| EARTHQUAKE ZONE | Ss = (0.35) S1 = (0.099) |
| WIND LOAD | 109 MPH |
| STRESS RELIEF | NOT REQ'D |
| RADIOGRAPHIC EXAM | FULL X-RAY (SEE NOTE 8) |
| DYE PENETRANT EXAM | NOT REQ'D |
| MAGNETIC PARTICLE EXAM | NOT REQ'D |
| HYDROSTATIC TEST | 102 PSIG / GAUGE #9 |
| PNEUMATIC TEST | – |
| JKT DESIGN AND FAB. CODE | ASME |
| JKT CERT. STAMP REQ'D. | YES |
| JKT DESIGN PRESSURE | 150 PSIG / FV |
| JKT DESIGN TEMPERATURE | 400° F |
| JKT MIN. DESIGN METAL TEMP. | -20° F @ 150 PSIG |
| JKT OPERATING PRESSURE | 87 PSIG |
| JKT OPERATING TEMPERATURE | – |
| JKT JOINT EFFICIENCY HEADS | – |
| JKT JOINT EFFICIENCY SHELL | – |
| JKT HYDRO TEST | 195 PSIG / GAUGE #13 |

## VESSEL FINISH

| | |
|---|---|
| INTERIOR WELD TREATMENT: | SAV TANK STANDARD |
| EXTERIOR WELD TREATMENT: | SAV TANK STANDARD |
| SAV TANK FINISHING STANDARD: | SEE NOTE 6 |
| INSULATION: | 2" (BY OTHERS) (TO BE CONFIRMED) |
| PAINTING: | N/A |

## VESSEL CAPACITY AND WEIGHTS

| | |
|---|---|
| OPERATING CAPACITY | – |
| FULL CAPACITY | 3,000 GAL. |
| EMPTY SHIPPING WEIGHT | 7,800 LBS. |
| WEIGHT FULL OF WATER | 32,800 LBS. |
| WEIGHT FULL OF PRODUCT | 33,800 LBS. |

ASME SECT. VIII, DIV. 1
2023 EDITION

ENG. _____ DATE: _____
Q.C. _____ DATE: _____
A.I. _____ DATE: _____

This drawing is issued for customer approval. please review, make approval changes (if any) in red. check the appropriate box, sign & date.

- ☐ Approval – no changes. Please proceed with fabrication.
- ☐ Approved as noted. Please proceed with fabrication
- ☐ Not approved. Please make changes and resubmit.

Customer signature _____ Date _____

## GENERAL NOTES

1.) COVER ALL FLANGES, OPENINGS & MACHINED SURFACES PRIOR TO SHIPMENT UNLESS OTHERWISE NOTED.
2.) BOLT HOLES TO STRADDLE 0° & 180° UNLESS OTHERWISE NOTED.
3.) REPADS TO HAVE (1) ø1/4" NPT TELL-TALE HOLES FOR PNEUMATIC TESTING AT 2 PSIG FOR PRESSURE RETAINING PARTS. ALL OTHER REPADS TO HAVE (1) ø1/4" WEEP HOLE AT LOWEST POINT ON PAD.
4.) ASME CODE VESSELS TO BE IN ACCORDANCE WITH UG-80 & UG-81. TOLERANCES: +/- 1/8" FOR DIMENSIONS AND +/- 2 DEGREES FOR ORIENTATIONS.
5.) ASME MATERIALS TO CONFORM TO THE FOLLOWING: FLANGES – B16.5, FITTINGS – B16.9 & COUPLINGS – B16.11.
6.) PICKLE ALL EXTERIOR WELDS. PASSIVATE INTERIOR & EXTERIOR OF VESSEL.
7.) ALL INTERNAL WELDS TO BE GROUND SMOOTH NOT FLUSH. ALL INTERNAL SURFACE TO BE 150 GRITS.
8.) X-RAY: FULL RADIOGRAPHY IS REQUIRED PER CODE.

## REVISIONS

| REV | D.BY | C.BY | DATE | DESCRIPTION |
|---|---|---|---|---|
| 2 | RS | NP | 11/4/25 | AS BUILT CERTIFIED |
| 1 | RS | AD | 10/27/25 | APPROVAL REV 1 |
| 0 | RS | AD | 8/7/25 | APPROVAL |


Savannah Tank & Equipment Corp.
1517 Telfair Road, Savannah, GA 31415
(912) 233-8902


DRAWN BY: RS
CHK'D BY: AD
APPROVED BY: NP
SCALE: 1/2" = 1'-0"

SYNTHOMER
REACTOR 12
EQUIP. #
CUST. PO #4500357344

DRAWING NO.: 083-25-1 SHT 1 OF 6 REV. SET 2

LONG SEAMS

| COURSE | ORIENTATION |
|---|---|
| 1 (TOP) | 270° |
| 2 | 278° |

*VERT – TOP TO BOTTOM

Ship loose items:
NONE

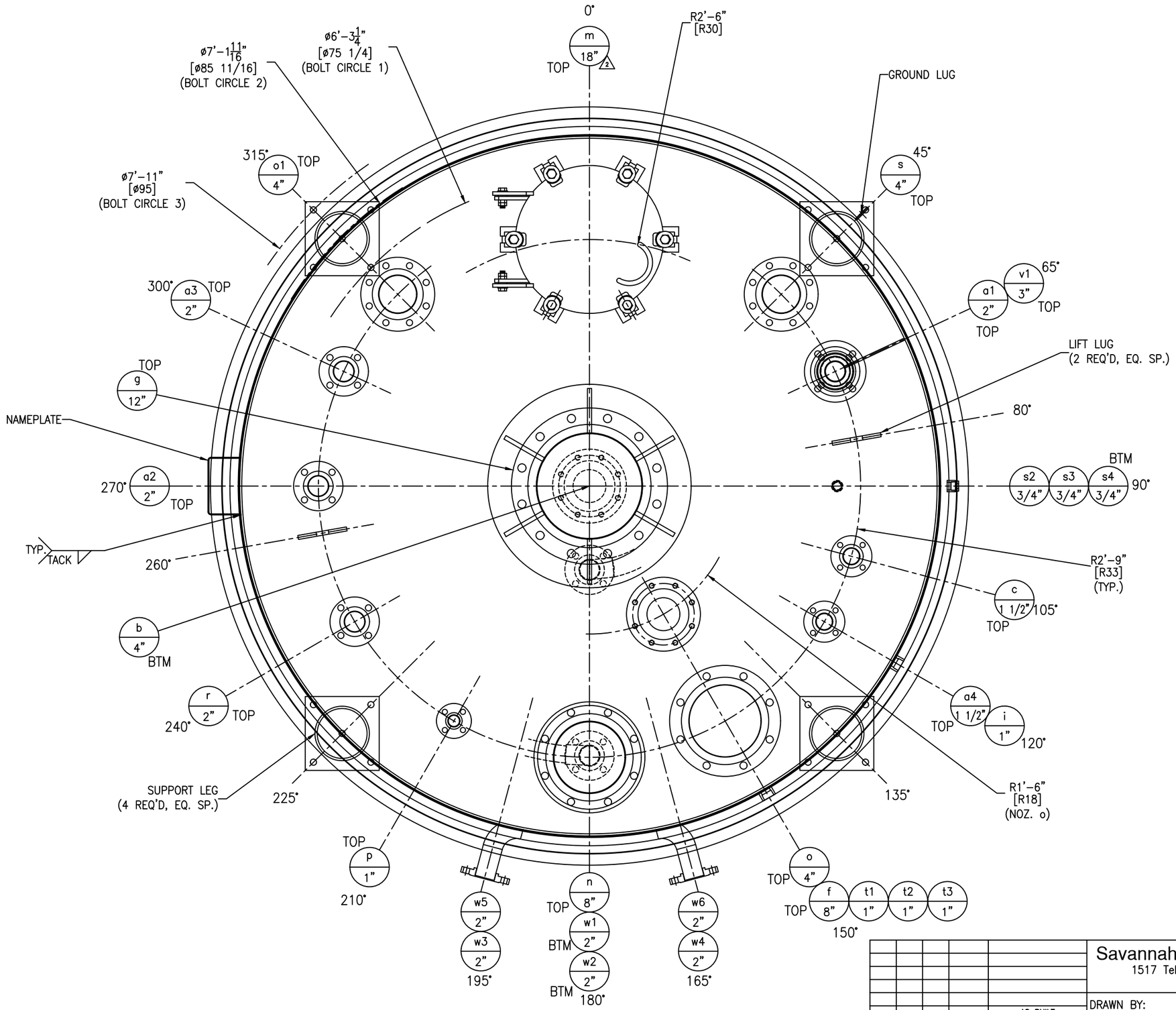


# PLAN VIEW

| REV | D.BY | C.BY | DATE | DESCRIPTION |
|---|---|---|---|---|
| | | | | AS BUILT |
| 2 | RS | NP | 11/4/25 | CERTIFIED |
| 1 | RS | AD | 10/27/25 | APPROVAL REV 1 |
| 0 | RS | AD | 8/7/25 | APPROVAL |

⚠ REVISIONS


Savannah Tank & Equipment Corp.
1517 Telfair Road, Savannah, GA 31415
(912) 233-8902


DRAWN BY: RS
CHK'D BY: AD
APPROVED BY: NP
SCALE: 1 1/2" = 1'-0"

SYNTHOMER
REACTOR 12
EQUIP. #
CUST. PO #4500357344

DRAWING NO.: 083-25-2 SHT 2 OF 6 REV. SET 2

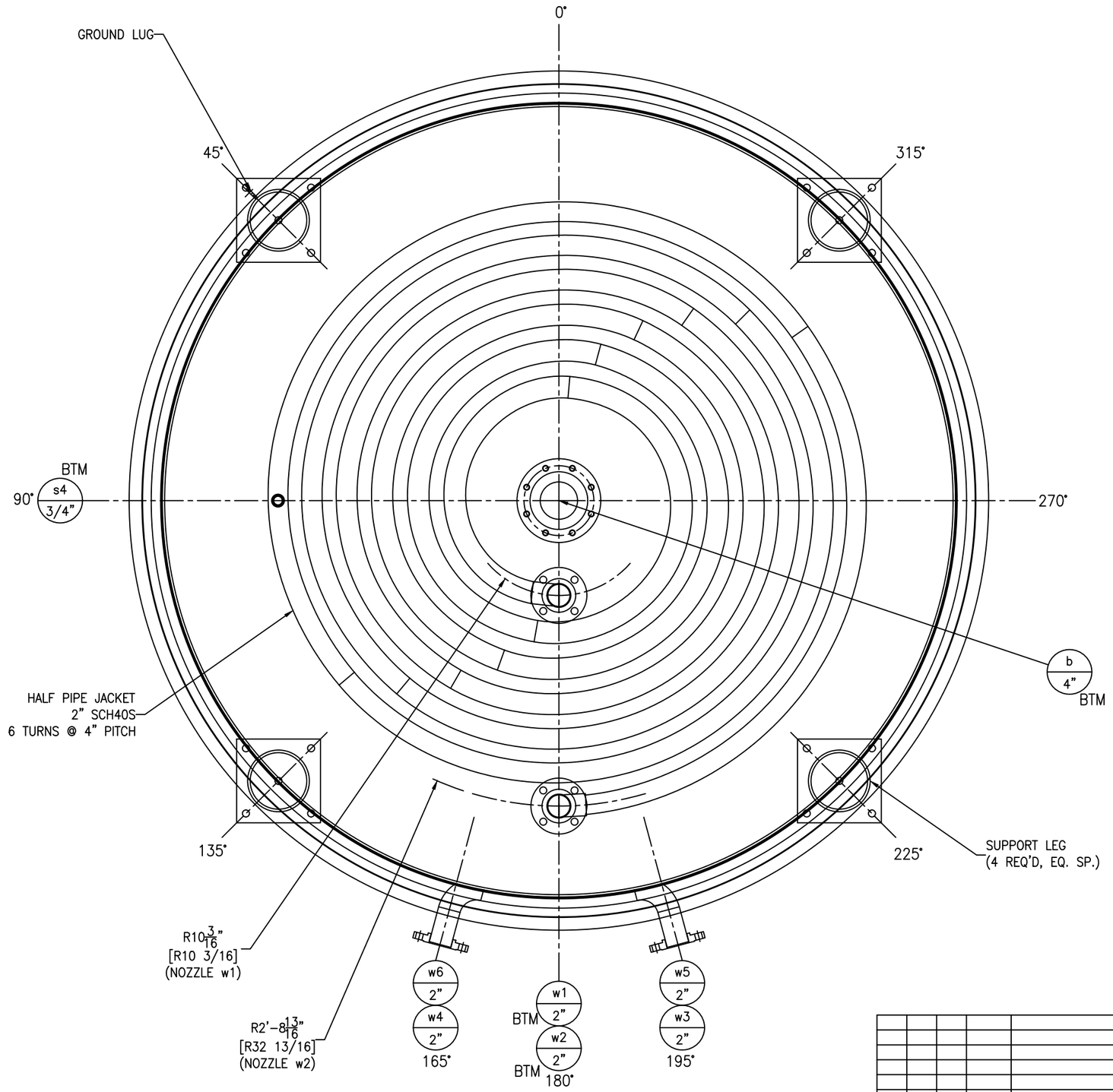


# BOTTOM VIEW

| REV | D.BY | C.BY | DATE | DESCRIPTION |
|---|---|---|---|---|
| | | | | AS BUILT |
| 2 | RS | NP | 11/4/25 | CERTIFIED |
| 1 | RS | AD | 10/27/25 | APPROVAL REV 1 |
| 0 | RS | AD | 8/7/25 | APPROVAL |

⚠ REVISIONS

Savannah Tank & Equipment Corp.
1517 Telfair Road, Savannah, GA 31415
(912) 233-8902

DRAWN BY: RS
CHK'D BY: AD
APPROVED BY: NP
SCALE: 1 1/2" = 1'-0"

SYNTHOMER
REACTOR 12
EQUIP. #
CUST. PO #4500357344

DRAWING NO.: 083-25-3 SHT 3 OF 6 REV. SET 2

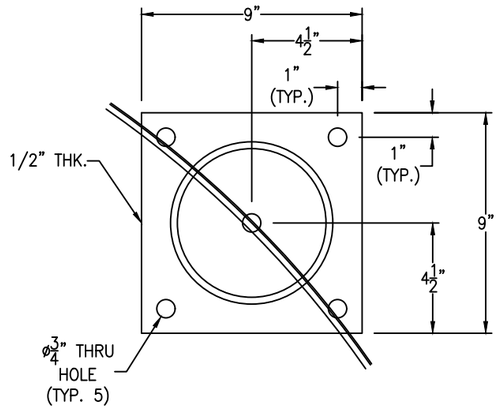


FOOT DETAIL

(4 REQ'D) SCALE: 3" = 1'-0"

FC-14

NOTE: v1 NOZZLE & a1 FLANGE NOT SHOWN FOR CLARITY.

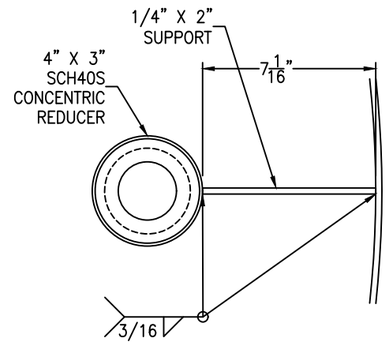


NOZZLE a1,v1 SUPPORT DETAIL

(3 REQ'D) SCALE: 3" = 1'-0"

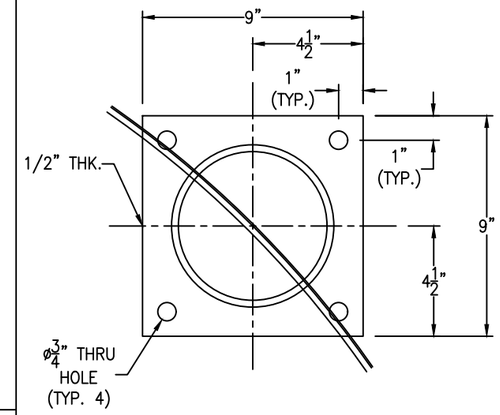


INTERMEDIATE BOLTING PLATE DETAIL

(8 REQ'D) SCALE: 3" = 1'-0"

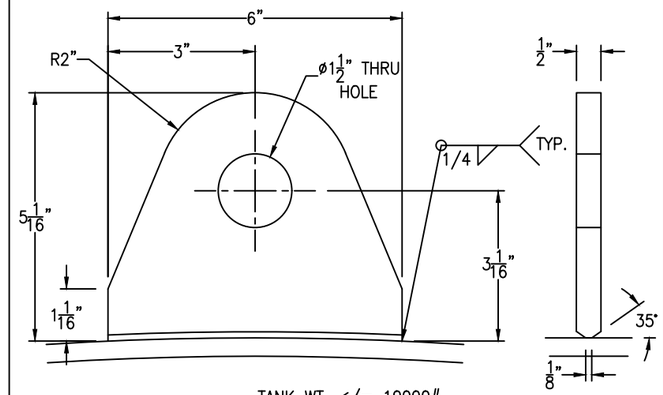


TANK WT. <= 10000#

SHACKLE PIN DIA. = 1 3/8"

LIFT LUG DETAIL

(2 REQ'D) SCALE: 6" = 1'-0"

FC-14

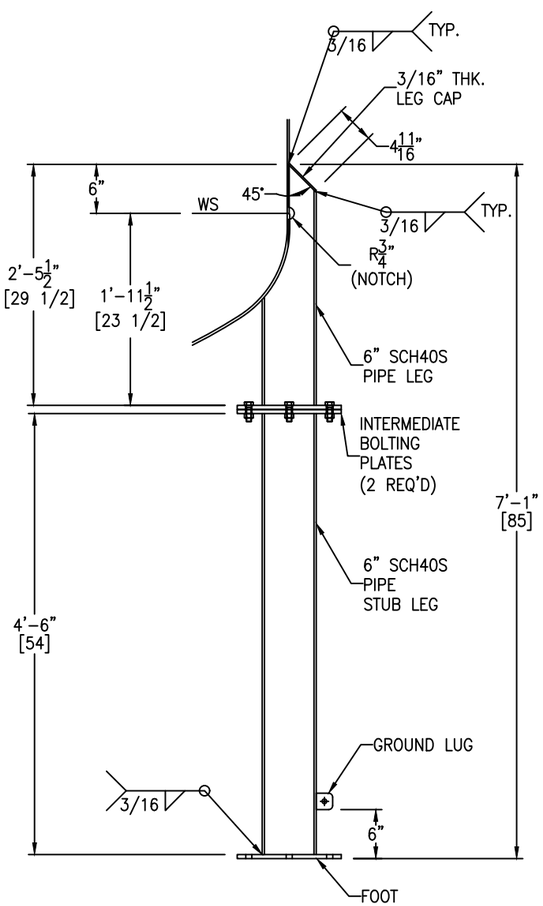


LEG DETAIL

(4 REQ'D) SCALE: 1" = 1'-0"

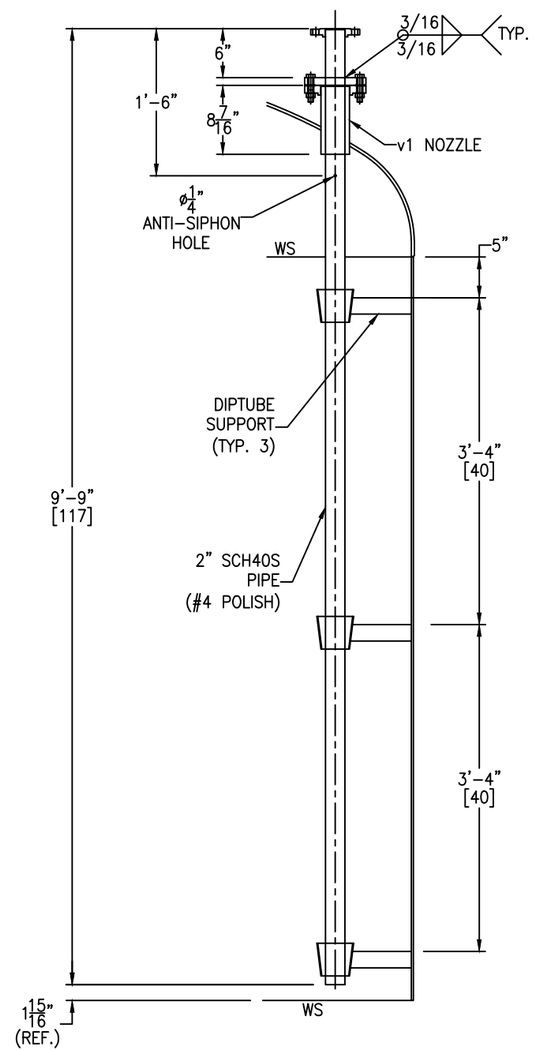


NOZZLE a1,v1 DETAIL

SCALE: 1" = 1'-0"

FC-14

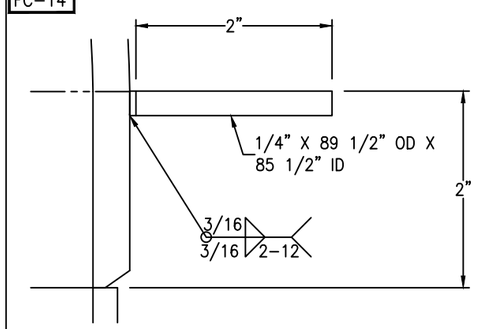


TOP INSULATION RING DETAIL

(1 REQ'D) SCALE: 1'-0" = 1'-0"

FC-14

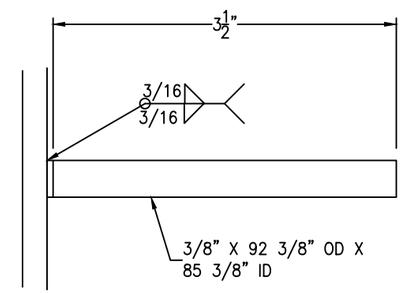


VACUUM RING DETAIL

(1 REQ'D) SCALE: 1'-0" = 1'-0"

FC-14

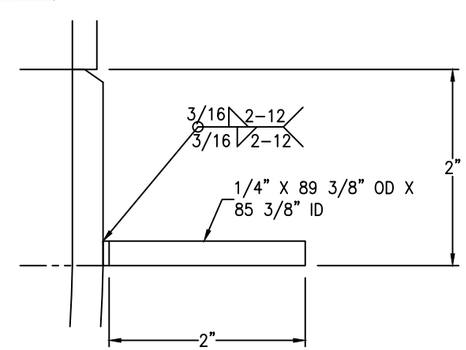


BOTTOM INSULATION RING DETAIL

(1 REQ'D) SCALE: 1'-0" = 1'-0"

FC-14

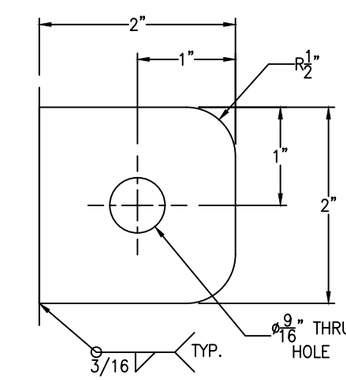


GROUND LUG IS LOCATED @ 45°

GROUND LUG DETAIL

(1 REQ'D) SCALE: 1'-0" = 1'-0"

Bolting for blinds
v1: (4) 5/8"-11 NC x 3" HH BOLT
(4) 5/8"-11 NC HH NUT
(1) 3" 150# RING GASKET x 1/8" THK.
R: (4) 5/8"-11 NC x 3" HH BOLT
(4) 5/8"-11 NC HH NUT
(1) 2" 150# RING GASKET x 1/8" THK.

Bolting for Removable legs:
(16) 5/8"-11 NC x 2" HH BOLT
(16) 5/8"-11 NC HH NUT

| REV | D.BY | C.BY | DATE | DESCRIPTION |
|---|---|---|---|---|
| | | | | AS BUILT |
| 2 | RS | NP | 11/4/25 | CERTIFIED |
| 1 | RS | AD | 10/27/25 | APPROVAL REV 1 |
| 0 | RS | AD | 8/7/25 | APPROVAL |

REVISIONS


Savannah Tank & Equipment Corp.
1517 Telfair Road, Savannah, GA 31415
(912) 233-8902


DRAWN BY: RS
CHK'D BY: AD
APPROVED BY: NP
SCALE: 1/2" = 1'-0"

SYNTHOMER
REACTOR 12
EQUIP. #
CUST. PO #4500357344

DRAWING NO.: 083-25-4 | SHT 4 OF 6 | REV. SET 2

FC-14

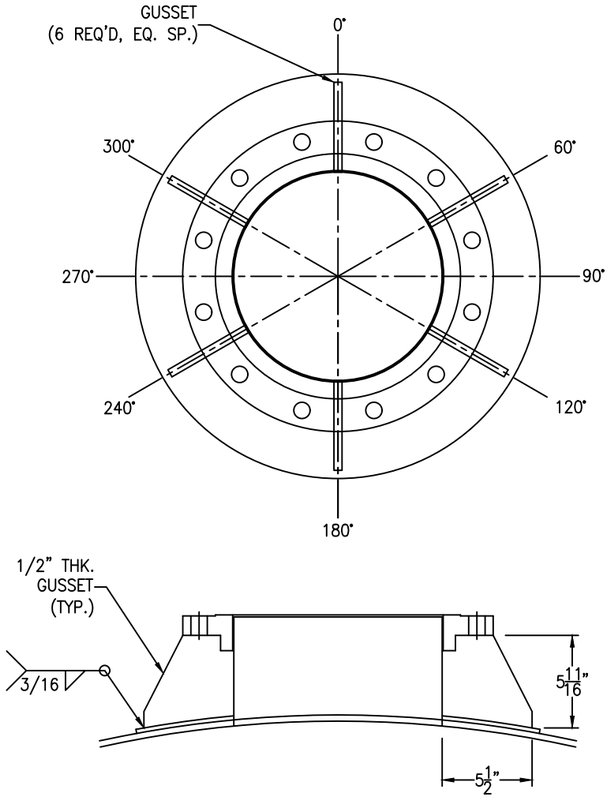


NOZZLE g DETAIL

SCALE: 2" = 1'-0"

FC-14

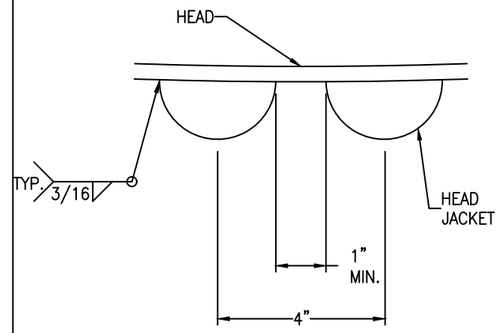


HALF-PIPE JACKET DETAIL (HEAD)

SCALE: 6" = 1'-0"

FC-14

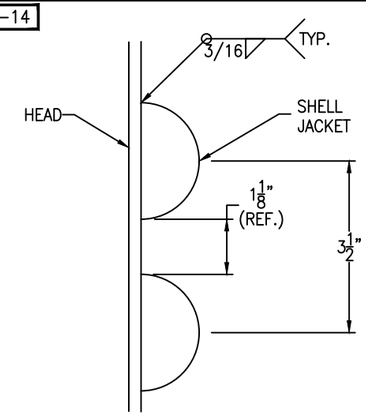


HALF-PIPE JACKET DETAIL (SHELL)

SCALE: 6" = 1'-0"

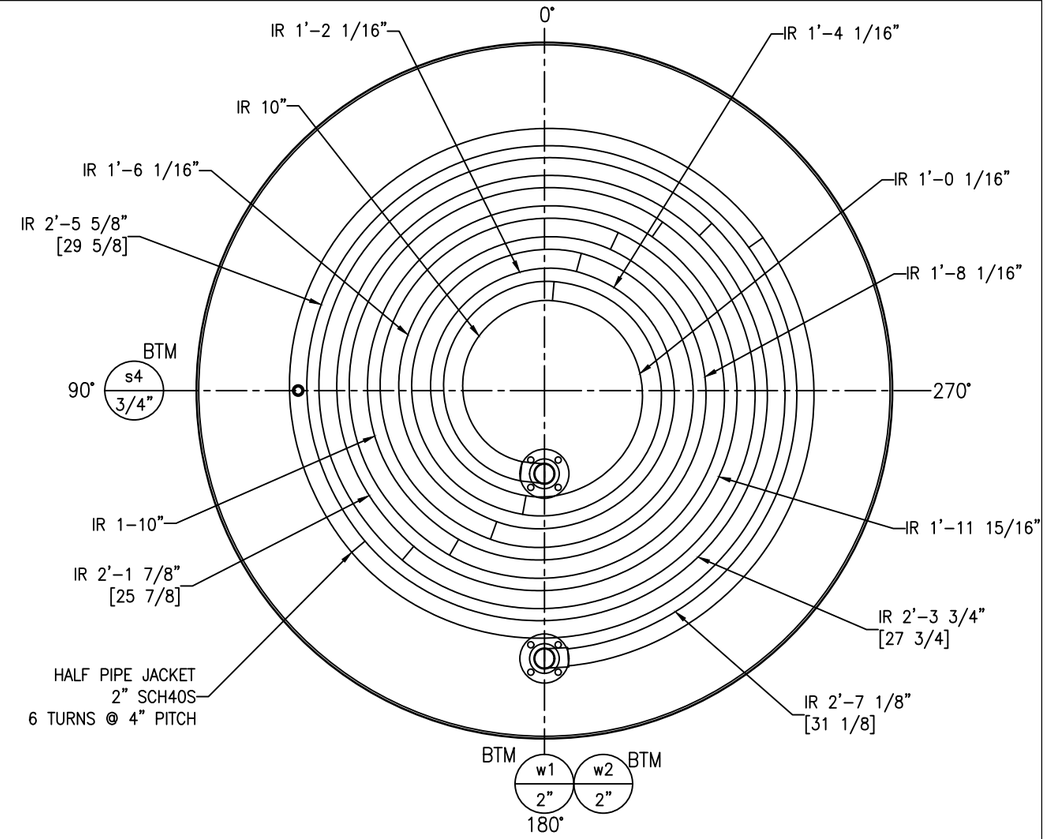


BOTTOM HEAD HALF PIPE JACKET DETAIL

SCALE: 1" = 1'-0"

FC-14

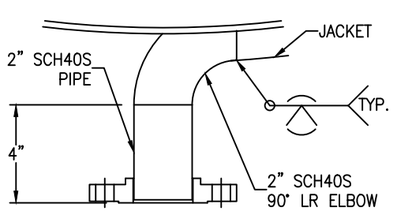


NOZZLE w3,w5 DETAIL

(2 REQ'D) SCALE: 3" = 1'-0"

FC-14

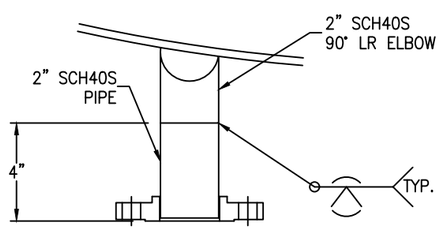


NOZZLE w1 DETAIL

SCALE: 3" = 1'-0"

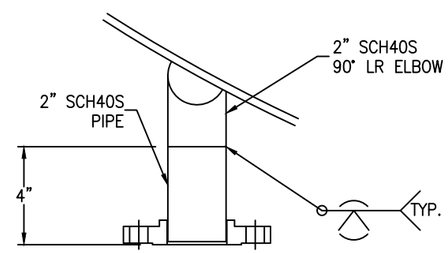


NOZZLE w2 DETAIL

SCALE: 3" = 1'-0"

FC-14

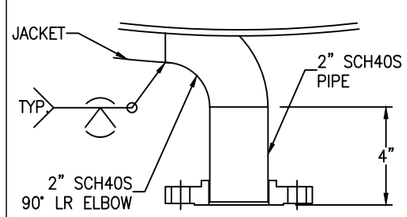


NOZZLE w4,w6 DETAIL

(2 REQ'D) SCALE: 3" = 1'-0"

MEASUREMENTS ARE ARC LENGTHS TAKEN FROM THE HEAD CENTER LINE TO INNER EDGE OF THE HALF-PIPE

| TURN # | 0° | 45° | 90° | 135° | 180° | 225° | 270° | 315° |
|---|---|---|---|---|---|---|---|---|
| | 9 1/16 | 9 9/16 | 10 1/16 | 10 9/16 | 11 1/16 | 11 9/16 | 12 1/16 | 12 9/16 |
| 1 | 13 1/16 | 13 9/16 | 14 1/16 | 14 9/16 | 15 1/16 | 15 9/16 | 16 1/16 | 16 9/16 |
| 2 | 17 1/16 | 17 9/16 | 18 1/16 | 18 9/16 | 19 1/16 | 19 9/16 | 20 1/16 | 20 9/16 |
| 3 | 21 1/16 | 21 9/16 | 22 1/16 | 22 9/16 | 23 1/16 | 23 9/16 | 24 1/16 | 24 9/16 |
| 4 | 25 1/16 | 25 9/16 | 26 1/16 | 26 9/16 | 27 1/16 | 27 9/16 | 28 1/16 | 28 9/16 |
| 5 | 29 1/16 | 29 9/16 | 30 1/16 | 30 9/16 | 31 1/16 | 31 9/16 | 32 1/16 | 32 9/16 |
| 6 | 33 1/16 | | | | | | | |

ALL PIPE LENGTHS INCLUDE 12" TANGENTS ON EACH END

| PIECE NUMBER | PART NUMBER | INSIDE ROLL RADIUS | PIPE LENGTH (INC TAN) | DEGREE OF ARC |
|---|---|---|---|---|
| 1 | 1 | 10 | 60 3/16 | 185 |
| 2 | 2 | 12 1/16 | 66 3/4 | 185 |
| 3 | 3 | 14 1/16 | 73 1/4 | 185 |
| 4 | 4 | 16 1/16 | 79 3/4 | 185 |
| 5 | 5 | 18 1/16 | 86 3/16 | 185 |
| 6 | 6 | 20 1/16 | 92 9/16 | 185 |
| 7 | 7 | 22 | 98 7/8 | 185 |
| 8 | 8 | 23 15/16 | 105 1/8 | 185 |
| 9 | 9 | 25 7/8 | 111 1/4 | 185 |
| 10 | 10 | 27 3/4 | 117 3/8 | 185 |
| 11 | 11 | 29 5/8 | 123 3/8 | 185 |
| 12 | 12 | 31 1/8 | 94 1/2 | 125 |

| REV | D.BY | C.BY | DATE | DESCRIPTION |
|---|---|---|---|---|
| | | | | AS BUILT |
| 2 | RS | NP | 11/4/25 | CERTIFIED |
| 1 | RS | AD | 10/27/25 | APPROVAL REV 1 |
| 0 | RS | AD | 8/7/25 | APPROVAL |

⚠1 REVISIONS


Savannah Tank & Equipment Corp.
1517 Telfair Road, Savannah, GA 31415
(912) 233-8902


DRAWN BY: RS
CHK'D BY: AD
APPROVED BY: NP
SCALE: 1/2" = 1'-0"

SYNTHOMER
REACTOR 12
EQUIP. #
CUST. PO #4500357344

DRAWING NO.: 083-25-5 SHT 5 OF 6 REV. SET 2

FC-14

*NOTE: SEE VESSEL ORIENTATION SHEET#2 FOR HINGE LOCATION.

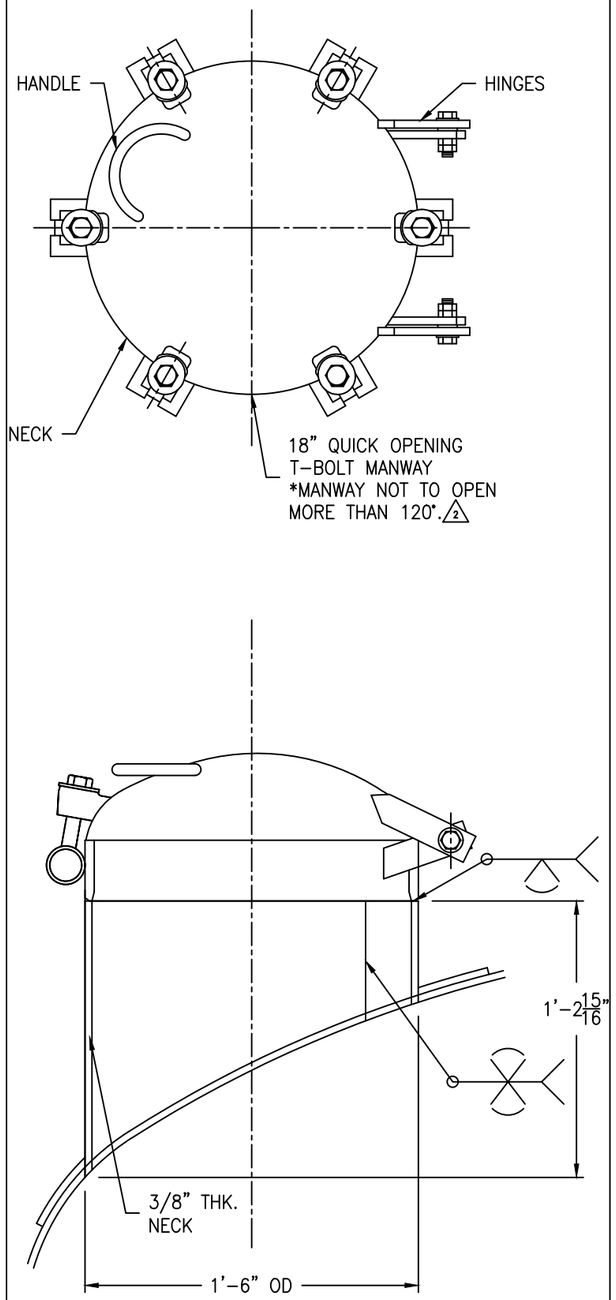


MANWAY DETAIL

SCALE: 2" = 1'-0"

| REV | D.BY | C.BY | DATE | DESCRIPTION |
|---|---|---|---|---|
| | | | | AS BUILT |
| 2 | RS | NP | 11/4/25 | CERTIFIED |
| 1 | RS | AD | 10/27/25 | APPROVAL REV 1 |
| 0 | RS | AD | 8/7/25 | APPROVAL |

1 REVISIONS


Savannah Tank & Equipment Corp.
1517 Telfair Road, Savannah, GA 31415
(912) 233-8902


DRAWN BY: RS
CHK'D BY: AD
APPROVED BY: NP
SCALE: 2" = 1'-0"

SYNTHOMER
REACTOR 12
EQUIP. #
CUST. PO #4500357344

DRAWING NO.: 083-25-6 SHT 6 OF 6 REV. SET 2